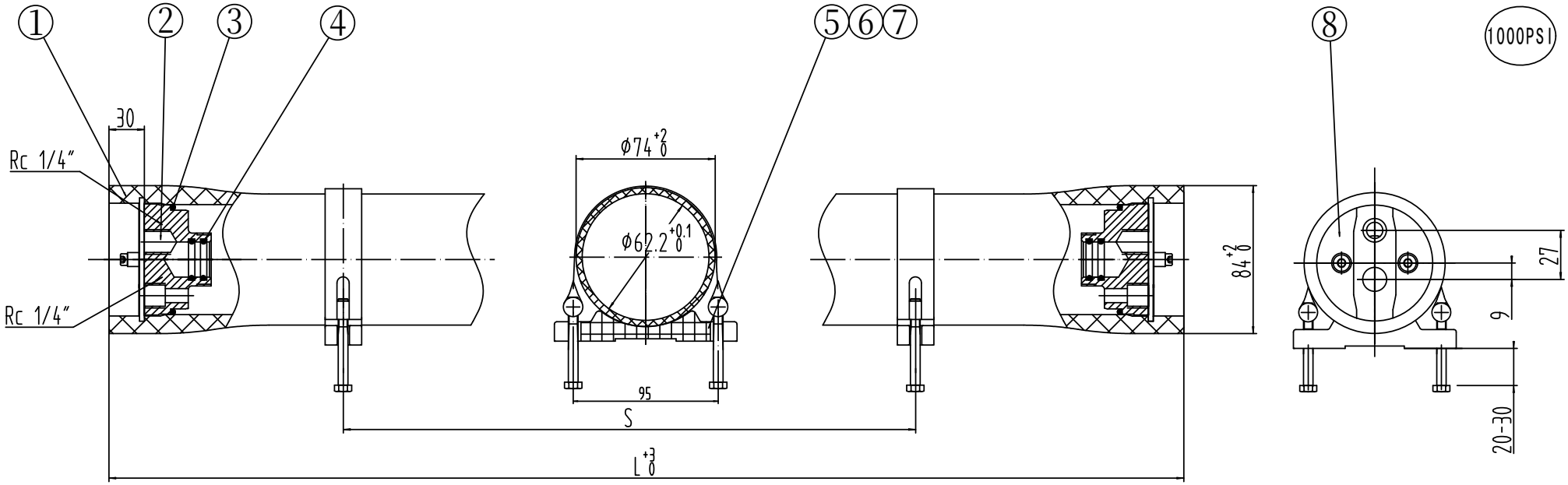

Ref.	Part Number	L (MM)	S (MM)	Approx assembly weight (KG)
2540	F25100E-1	1106	700	6
2521	F25100E-2	623	400	4
2514	F25100E-3	445	200	3.5

Note:

1. Design pressure: 1000PSI(69Bar)
2. Design temperature: 150°F(66°C)
3. Minimum temperature: 14°F(-10°C)
4. Working medium: Water,PH 3-11
5. Please operate in accordance with User Guide
6. Flexible piping should be used on permeate connection tomainfold
7. Subject to change without prior notice

Ref.	Description	Part Number	Qty.	Material	Remark
8	Locking Crescent	F25H-04-01	4	316LSST	
7	Strap	F25H-03-01	2	316SST-Rubber	
6	Strap Screw	F25H-86-01	4	316LSST	M6*60
5	Saddle	F25H-02-01	2	Rubber	
4	O-Ring	F25H-59-01	4	EPDM	19*2.65
3	O-Ring	F25H-70-01	2	EPDM	56*3.55
2	End Plate	F25H-05-01	2	2507SST	
1	Pressure Shell	See Selection Table	1	Epoxy FRP	White

Harbin FirstLine Environment Technology Co.,Ltd.

First Line	Design Date	Model	F25-1000E Pressure Vessel
	Review Date	DRG	F25-100-E-00-01
	Approval Date	Unit mm	REV. 2016